Photoelectrics

xxxxxxxxxxxx/ xxxxxxxxxxx / dxxxcxcccccc /
xxxxxxxxxx / cccccxcxccxcxxcxc

Colour sensor PD12

jkfng f sdf s øø<sdk øp<sv / cxcxcxcxcd hxcxcxcxcxc /
ghsdgs shsh ss / xcxxcxcxcxcxdxzfh cxcxc /
hs sdh s xnjsxhs dj sdjhst strt s sh

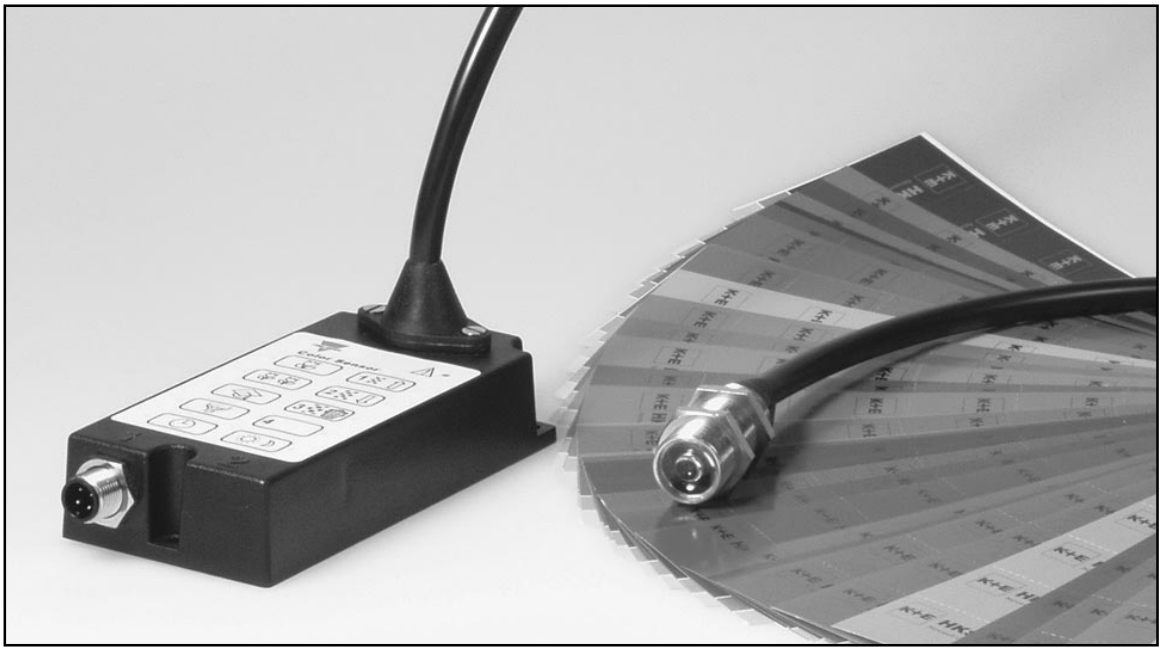

User Manual

Bedienungsanleitung
Manuel Utilisateur
Manual del Usuario
Manuale d'istruzione
Brugerhåndbog

CARLO GAVAZZI

ENGLISH Page 3
DEUTSCH Seite xx
FRANÇAIS Page xx
ESPAÑOL Pagina xx
ITALIANO Pagina xx
DANSK Side xx

Photoelectrics
Colour Sensor, 1 or 4 Channels
Type PD 12

CONTENTS **Page**

Installation	3
Product Description & Selection Guide	4
Keyboard	5
Getting Started	6
Programming	7
Set-up of the Fibre	11
Specifications	74
Dimensions	76
Wiring Diagram	77
Installation Hints	78

Installation

1. **Mounting the sensor**
   gngngngngngngngng

2. **Supplying the sensor**
   gkgkgkgkgkgkgkg

3. **Programming the sensor**
   Program the sensor according to the following description.

Product Description & Selection Guide

The colour sensors PD12.. are fibre optic amplifiers made specifically for recognition of 1 or 1 to 4 colours. Teaching of the colours is easily performed by means of the “Teach-in” function. Each colour has a separate output which can be prolonged up to 5 sec by means of the built-in timer. The output function can also be programmed to be either NO or NC.
The colour sensor is used for detection of coloured labels, marks, tags, wires, liquids, etc.

Product Highlights

- Range: From 2 to 60 mm, fibre dependent
- Teach-In (keyboard or remote setup)
- Keyboard lock
- Detection of 1 or 1 to 4 recorded colours
- Microprocessor controlled and EEPROM parameter storage
- Operational voltage 24 V DC
- Output 100 mA, NPN and PNP
- Light or dark operation selectable
- M12 standard plug
- IP65 protection
- Timer: 0.05 - 5 s one shot
- Three different tolerances of colours
- cUL and CE approved

Selection Guide

The colour sensor is available in two different versions, a 1-channel version with recognition of 1 colour and a 4-channel version which is able to recognize 4 different colours. An output is available for each colour.

One colour, one output	**PD 12 CNC 01 BP M1 T**
Four colours, four outputs	**PD 12 CNC 04 BP M1 T**

Keyboard

What's on the Keyboard

Keyboard layout

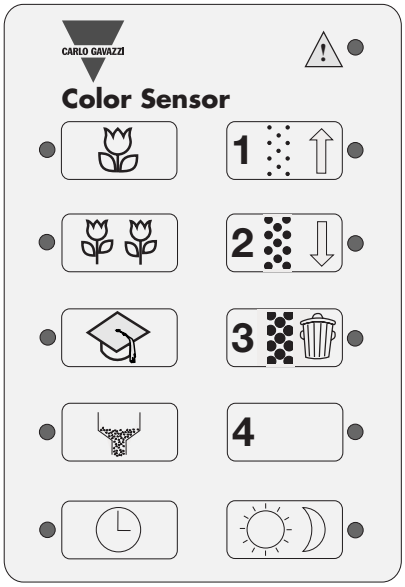

Signal LED
Flashes when the signal is too weak or too high

Near distance
for fibres with short focus distance

Far distance
for fibres with long focus distance

Teach
Activates Teach mode (learn colour)

Filter
Activates filter function

Timer
Activates timer function

Output 1
- Set output 1
- Fine tolerance
- Increase value

Output 2
- Set output 2
- Medium tolerance
- Increase value

Output 3
- Set output 3
- Rough tolerance
- Delete

Output 4
Set output 4

NO/NC Selection
Toggles between NO and NC for all channels

Getting Started

Lock and unlock the keyboard

At power up, if the five LED's are ON, the keyboard is locked. If the five LED's are OFF, the keyboard is unlocked.

To lock or unlock, press 1 and 3 simultaneously.

The status of the keyboard will shift.

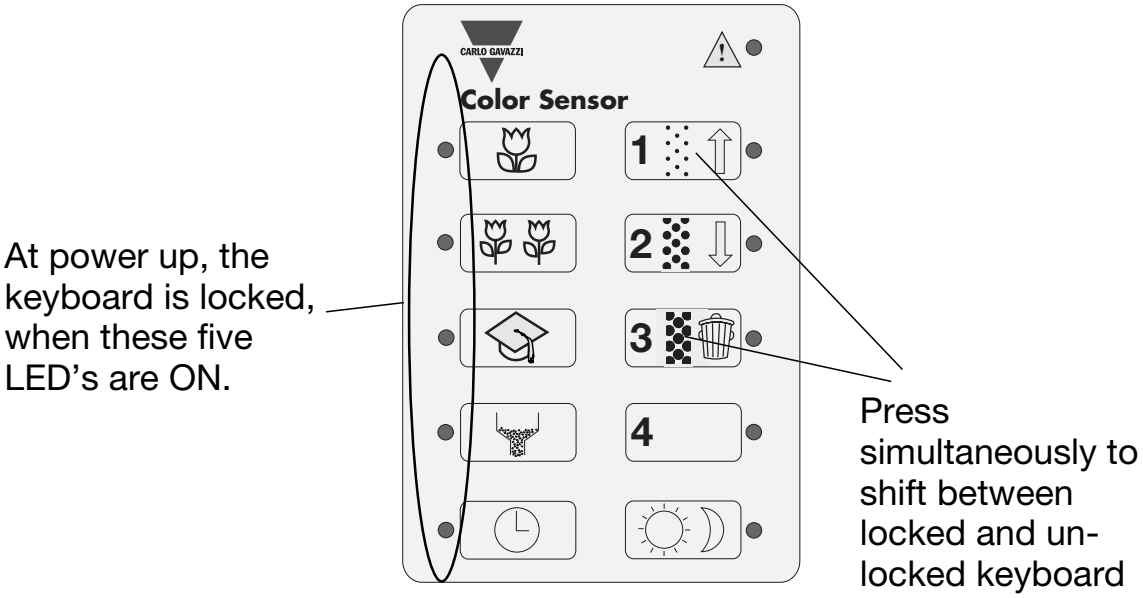

Programming

Before programming starts unlock the keyboard according to the earlier mentioned procedure.

Teach Function, step 1: Output Selection

a) Place the object under the tip of the fibre and press for short distance or for long distance detection. The respective LED flashes.

b) Only for 4-colour versions: To obtain the required combination of outputs and taught colours, it is possible to dedicate any of the outputs (for the 4-channel version) to any of the taught colours.

Select the output by pressing one of the following buttons:

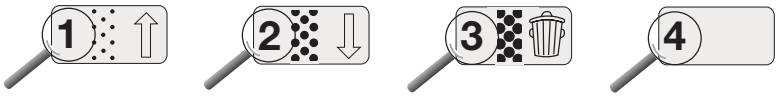

Teach Function, step 2: Sensitivity Adjustment

Three different levels of sensitivity can be assigned for the selected output.

To select colour tolerance, press the required button:

Fine tolerance	Medium tolerance	Rough tolerance

The distance LED or remains ON.

Programming

Teach Function, step 3: Record Colour

Place the object in the right position.

Press and the corresponding Teach LED flashes.

The sensor is in teach mode and to select the required output to the taught colour, press on of the following buttons:

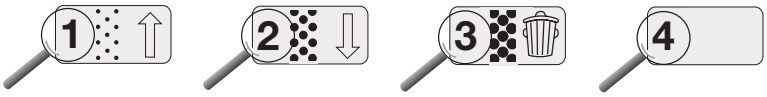

The colour is now recognized and the selected output is dedicated this colour. The corresponding LED to the selected output goes ON, ex. if channel 2 is recorded:

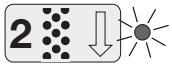

Light or Dark Operation

The output can be programmed for light operation (high level when the colour is recognized) or dark operation (low level when the colour is recognized). The choosed function will be transferred to all outputs.

To inverse the mode, press 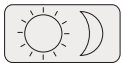 for at least 4 seconds.

The corresponding LED indicates whether light or dark operation is selected.

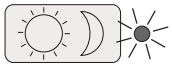 Light operation selected

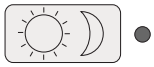 Dark operation selected

Programming

Timing Function

To enter the timing programming, press

The corresponding LED flashes

To reset the timer, press

To obtain the required time delay, use the following keys to increase or decrease the time:

	Increase time.	First step:	50 ms
		Following steps:	250 ms
	Decrease time.	First step:	50 ms
		Following steps:	250 ms

If the time value is different from 0, the LED is ON

To exit the timer programming, press

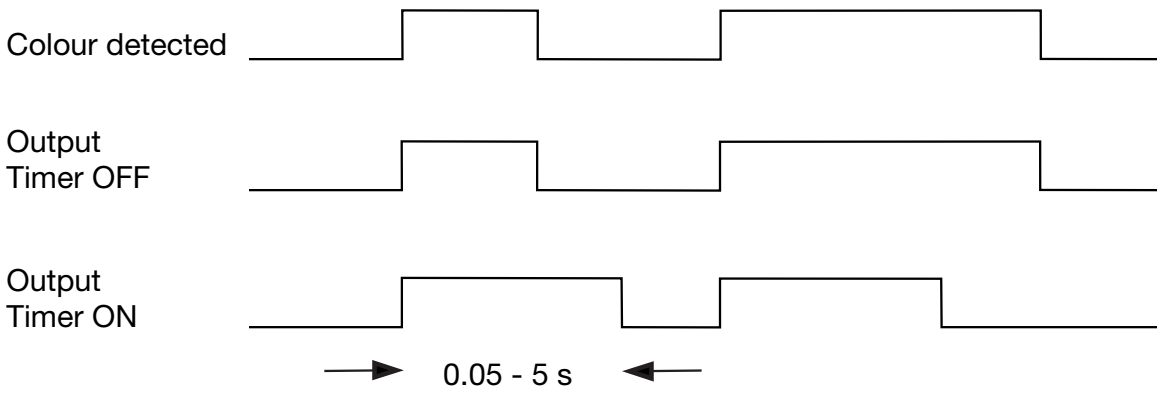

Programming

Filter Function

When to use the filter?
At the edge of a coloured spot, the colour may appear blurred to the sensor. For instance, if the taught colour is light blue it may be possible to record a dark blue colour at the edge, as dark blue and white is mixed and results in a light blue colour. The filter function ensures that the sensor has sufficient time to analyse the colour thoroughly to avoid the mentioned problem. The output will be a little delayed but will not be triggered from transients.
To adjust the filter, increase the value while the application is running until it works properly.

Press 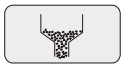 and the corresponding LED flashes 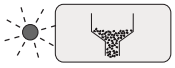

Use the following buttons to obtain the required filtering:

Clear filter value

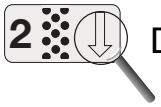

Decrease filter value

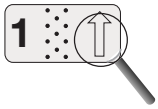

Increase filter value

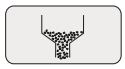
Exit filter setting

Signal LED

The signal LED flashes when the signal is too weak or too high to ensure an optimal analysis.

A possible solution is to tilt the optical axis and adjust the sensing distance.

Set-up of the Fibre

Comply with the advised sensing distance and be sure that the fibre is mounted within the actual range.

If the surface is glossy, simply tilt the fibre (the tip) approx. 20° from the perpendicular to the surface.

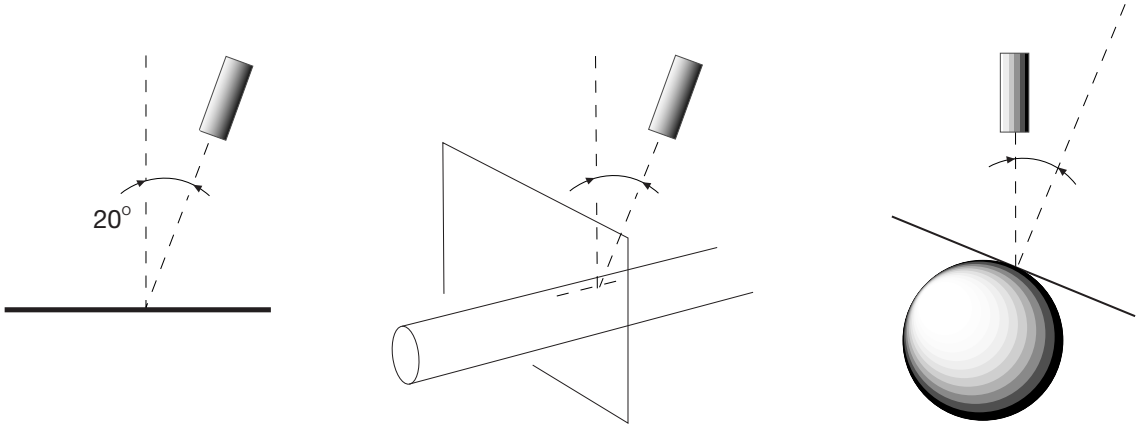

ENGLISH DEUTSCH FRANÇAIS ESPAÑOL ITALIANO DANSK

Specifications / Technische Daten / Caractéristiques Techniqu

Rated operational voltage (U_e) /Nenn-Betriebsspannung / Tension de fonctionnement nominale / Tensión de alimentación / Tensione di alimentazione / Nominelt spændingsområde

Ripple included / einschl. Restwellingkeit / ondulation inclue / ondulación incluida / ripple incluso / inkl. ripple

24 VDC ± 10%

Ripple / Restwelligkeit / Ondulation / Ondulación / Ripple / Ripple

≤ 10%

Voltage drop / jhgjhgjkd / fdujhgkfcfj / djdjfghj / lgfdfghjgfzx / fgjxfdgjxrtyjk

≤ 2.2 V @ 100 mA

Rated operational current (I_e) / Nenn-Betriebsstrom / Courant de fonctionnement nominal / Intensidad de salida / Corrente di carico / Max. strøm

≤ 100 mA (continuous)

Protection / Schutz / Protection / Protección / Protezione / Beskyttelse

Reverse polarity, short-circuit, transients
Verpolung, Kurzschluss, Transienten /
Inversion de polarité, court-circuit, transitoires /
Inversión de polaridad, cortocircuitos, transitorios /
Inversione di polarità, corto circuito, transitori /
Polaritet, kortslutning, transienter

Rated operating distance (S_n) / Nenn-Schaltabstand / Distance nominale de fonctionnement / Distancia nominal de detección / Distanza di attivazione nominale / Nominel tasteafstand

2 - 60 mm (fibre-dependent)

Output / hjhjhjhhjhjhjhjj / dfdfdfddfdfdfdfdf / rtrtrtrrtrtrtrtrtrtrtrtrtrtrtrtrtrrt / dsdssdsdsdsdsdsdsdsdsdsd / klklklklklklklklklklklkkhhjlhjljklt

NO/NC programmable

Analysis type / hjhjhjhhjhjhjhjj / dfdfdfddfdfdfdfdf / rtrtrtrrtrtrtrtrtrtrtrtrtrtrtrtrtrrt / dsdssdsdsdsdsdsdsdsdsdsd / klklklklklklklklklklklkkhhjlhjljklt

True RGB analysis

Ambient light / hjhjhjhhjhjhjhjj / dfdfdfddfdfdfdfdf / rtrtrtrrtrtrtrtrtrtrtrtrtrtrtrtrrt / ds-dssdsdsdsdsdsdsdsdsd / klklklklklklklklklklkkhhjlhjljklt

3.000 lux	(incandescent light)
5.000 lux	(sunlight)

Operating frequency / Schaltfrequenz / fgd gxdfgxfgcgxg / Frecuencia de funcionamiento / xhxgh hgxgh xh / Driftsfrekvens

500 Hz	(Short distance)	
25 Hz	(long distance)	

Operating temperature / Umgebungstemperatur, Betrieb / Température en fonctionnement / Temperatura ambiente, trabajo / Temperatura di funzionamento / Omgivelsestemperatur, drift

0° --> +40°C	(32° --> +104°F)

Storage temperature / Umgebungstemperatur, Lager / Température stockage / Temperatura ambiente, almacenamiento / Temperatura di immagazzinaggio / Omgivelsestemperatur, lager

-20° --> +60°C	(-40° --> +140°F)

Degree of protection / Schutzart / Indice de protection / Grado de protección / Grado di protezione / Tæthedsgrad

IP 65

ENGLISH

DEUTSCH

FRANÇAIS

ESPAÑOL

ITALIANO

DANSK

Dimensions / ghghghgh / xxxxx xx xx xxxxx / ghghghghgg / yyy yy yyy yyyy / ghghghghghd

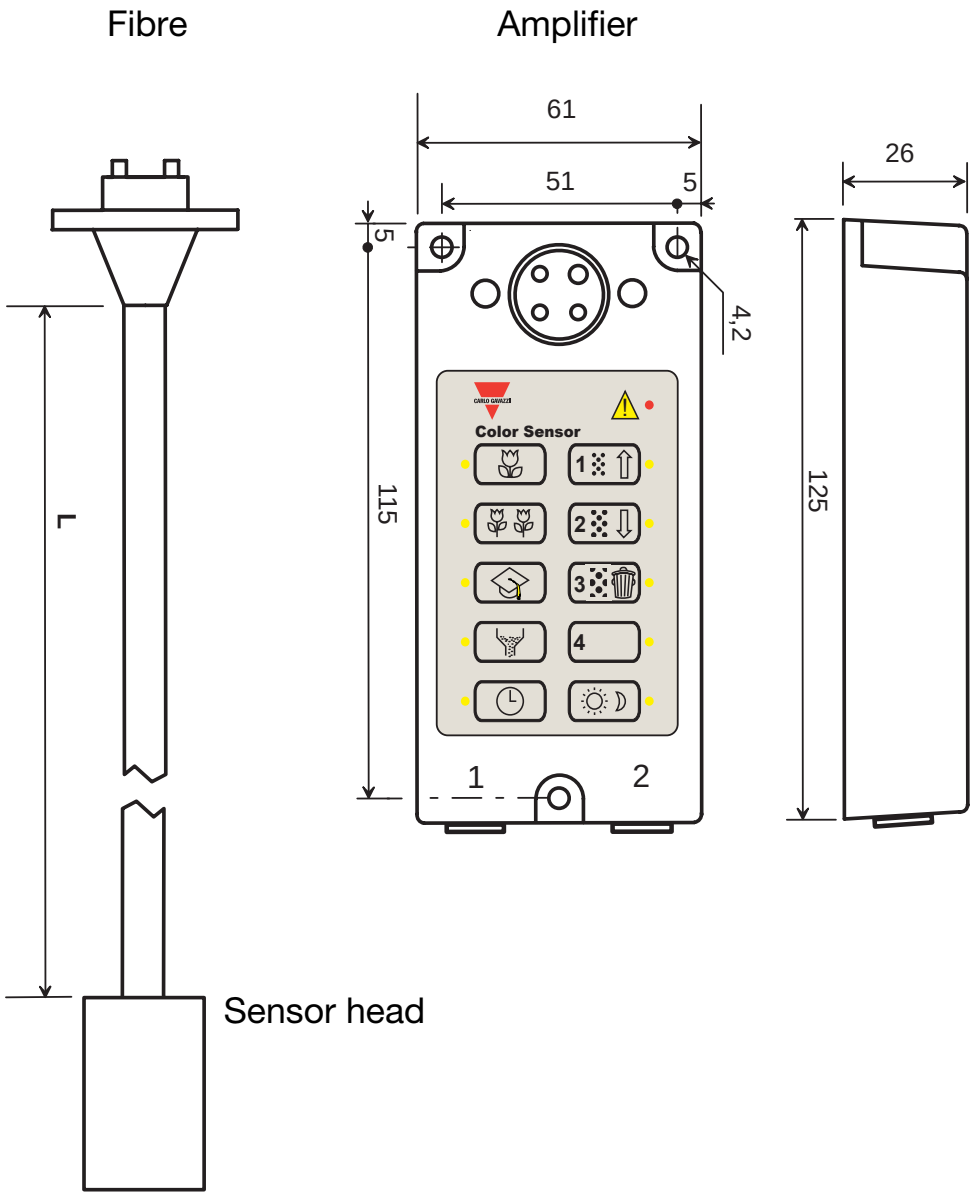

Wiring Diagram / Schaltbild / Schéma de Câblage / Diagrama de Conexiones / Collegamenti Elettrici / Forbindelsesdiagram

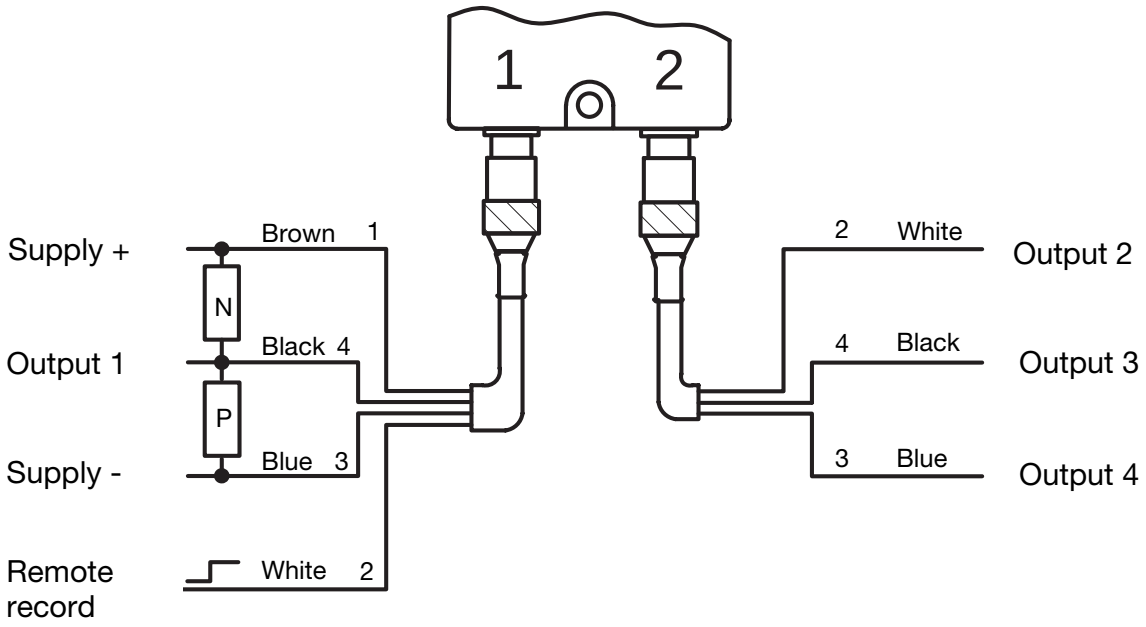

1-channel type: Plug 1
4-channel type: Plugs 1 and 2

Outputs 2-4 are identical to Output 1.
For remote record (channel 1 only) connect the white wire shortly to Supply + (1-BN) and the colour is stored (the recording is active on the leading edge). Remember to interrupt the connection to ensure proper function.

Installation Hints / Installationshinweise / Conseils d'Installation / No

	ENGLISH	DEUTSCH
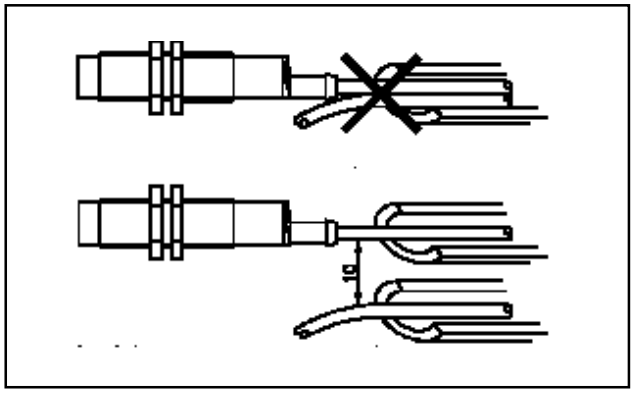	*To avoid interference from inductive voltage/ current peaks, separate the proximity switch power cables from any other power cables, e.g. motor, contactor or solenoid cables*	*Um Störungen durch induktive Spannungs- /Stromspitzen zu vermeiden, Kabel der Näherungsschalter getrennt von anderen stromführenden Kabeln halten*
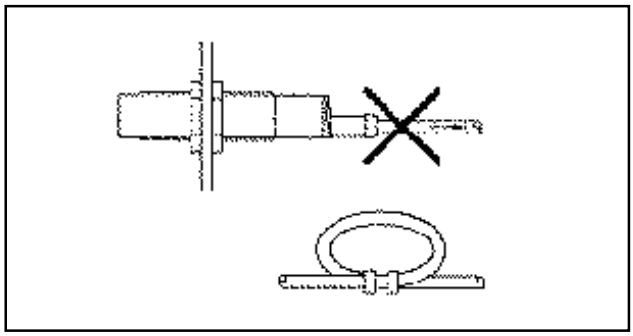	*Relief of cable strain* The cable should not be pulled	*Schutz vor Überdehnung des Kabels* Nicht am Kabel ziehen
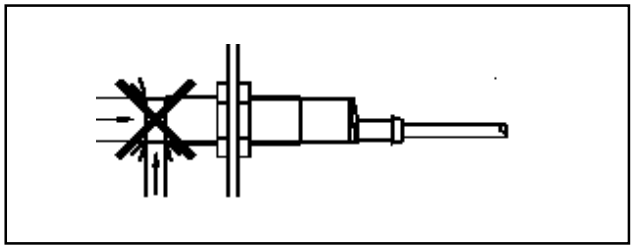	*Protection of the sensing face* A proximity switch should not serve as mechanical stop	*Schutz der Sensorfläche des Schalters* Näherungsschalter nicht als mechanischen Anschlag verwenden
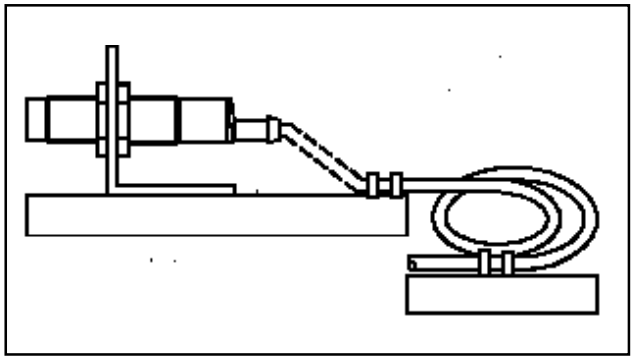	*Switch mounted on mobile carrier* Any repetitive flexing of the cable should be avoided	*Mobiler Näherungsschalter* Wiederholtes Biegen des Kabels vermeiden

ormas de Instalación / Consigli per l'Installazione / Installationsråd og -vink

FRANÇAIS	ESPAÑOL	ITALIANO	DANSK
Pour éviter les interférences issues des pics de tension et/ou des courants inductifs, veiller à toujours faire cheminer séparément les câbles d'alimentation des détecteurs de proximité et les câbles d'alimentation des moteurs, contacts ou solénoïdes	*Para evitar interferencias de tensión inductiva/ picos de intensidad se deben separar los cables del sensor del resto de los cables de alimentación tales como cables de motor, contactores o solenoides*	*Al fine di evitare interferenze di tipo elettrico, separare i cavi di alimentazione del sensore di prossimità dai cavi di potenza*	*For at undgå støjindflydelse fra induktive strøm-/spændingsspidser skal aftasterkablet adskilles fra andre kraftkabler, f.eks. fra motorer, transformatorer og magnetventiler*
Tension des câbles	*Alivio de la tensión del cable*	*Posizione del cavo*	*Aflastning af kabel*
Eviter toute contrainte en traction du câble	No se debe tirar del cable	Il cavo non deve essere teso	Der bør ikke trækkes i kablet
Protection de la face de détection du détecteur	*Protección de la cara de detección*	*Protezione della parte sensibile del sensore*	*Beskyttelse af følerens tasteflade*
Ne jamais utiliser un détecteur de proximité en tant que butée mécanique	Un sensor de proximidad nunca debe funcionar como tope mecánico	I sensori di prossimità non devono essere usati per bloccaggi meccanici	En aftaster bør ikke anvendes som mekanisk stop
Détecteur monté sur support mobile	*Conector montado sobre portadora móvil*	*Sensore installato su pedana mobile*	*Aftaster monteret på bevægeligt underlag*
Eviter toute répétition de courbure dans le cheminement du câble	Evitar doblar el cable repetidas veces	Evitare qualsiasi flessione ripetuta del cavo	Gentagne bøjninger af kablet bør undgås

CARLO GAVAZZI INDUSTRI A/S

Over Hadstenvej 40
DK-8370 Hadsten

Phone +45 89606100
Fax +45 86982522

Certified in accordance with ISO 9001
Gerätehersteller mit dem ISO 9001/EN 29 001 Zertifikat
Une société qualifiée selon ISO 9001
Empresa que cumple con ISO 9001
sdfgsbs gb sb sdgbsbsb sb gbs bs dbsbsdf sdb
Kvalificeret i overensstemmelse med ISO 9001

MAN PD12 MUL 10 09.02